1 产品介绍

星光眼®智能焊接专用相机 是为智能焊接应用而设计的主动式双目立体视觉3D相机产品，可快速生成点云数据模型、深度图、灰度图等结果数据信息。同时适应多种复杂环境，在强光、反光、黑色物体吸光等场景下依然支持高精度建模。作为焊接系统的视觉输入，可以配合软件实现工件扫描、焊缝提取、焊缝规划、焊缝跟踪等功能，动静态一体。

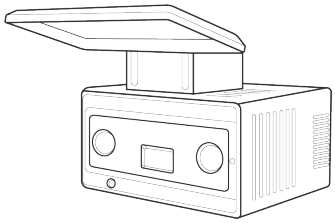

2 物品清单

- 相机 × 1
- 电源线和适配器 × 1
- 千兆网线 × 1

3 硬件安装

1. 使用安装转接件，将相机固定到机械臂上，如下图所示。（相机多面均设计安装孔，可满足各个角度的灵活安装。）

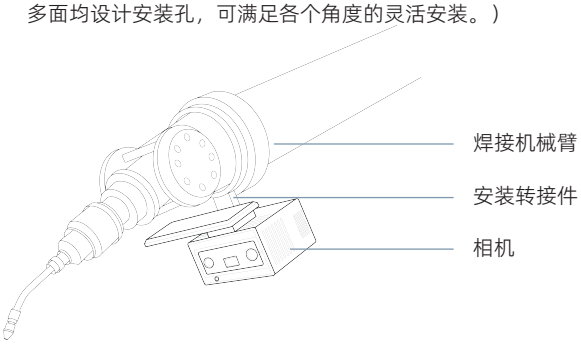

2. 安装电源线和网线，请注意对准插座上的缺口，如下图所示。插拔电缆不要使用蛮力，以免破坏插针。

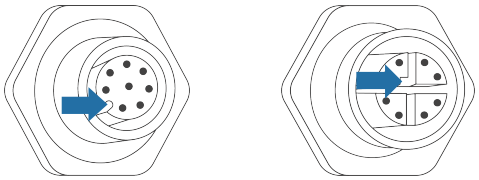

3. (可选) 将外部信号连接到相机配套的触发线缆，实现“电平使能”控制。更多信息请参考《3D工业相机用户手册》。
   - 橙色线缆（触发输入信号）
   - 棕色线缆（信号地）

4 更换保护罩（可选）

如果需要清洁或更换相机保护罩，请按如下步骤操作：

1. 使用螺丝刀旋开相机压板右侧的螺丝，将压板轻轻向右水平平移，直至其从卡槽中脱离，然后取下压板。
2. 取出压板后的旧玻璃，清洁或更换粘贴新玻璃。
3. 将压板向左水平平移，使其准确滑入卡槽，使用螺丝刀拧紧右侧的固定螺丝。

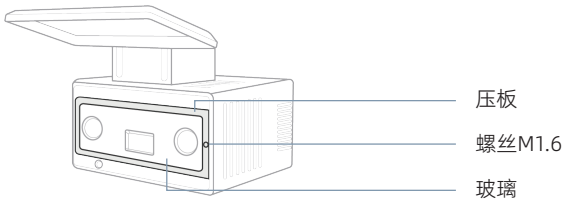

5 尺寸和安装孔位置

- 产品持续迭代更新，如果本指南中的图纸与购买实物版本不符，请联系工作人员获取相应版本安装图纸。

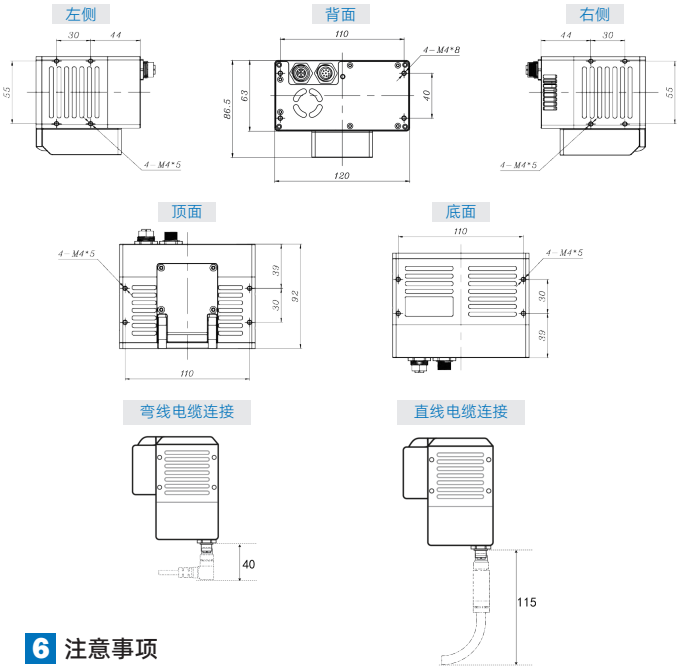

6 注意事项

⚠ 注意　本设备为高精度设备，请阅读并遵守下面的要求：

分类	项目	要求
相机安装板	材质	铝合金6061-T6。
	厚度	10mm及以上。（如果现场环境恶劣，振动大，安装板悬臂长，需要在安装板背面加加强筋）
	安装面平面度	≤0.1mm。
	效果	安装后相机底面应完全贴合，无翘曲变形。
电源	电源输入	相机电源输入：24V±4V 电流≥2A 符合接地规范。220V交流电需提供符合国标。
	设备上电	安装电源线时，请先连设备端，然后再连供电端。
	断电要求	安装设备和拆除设备时，必须先断开电源。
设备	稳定	确保设备安装牢靠、电缆不松动。确保工作时设备不抖动，以免影响精度。
	结构	请轻拿轻放设备，避免使其受到强烈的冲击或震动。
	电磁	切勿将设备靠近强磁物品。请做好静电防护并使设备远离电磁辐射。
	清洁	请持续保持设备玻璃视窗的清洁。
	完整	切勿擅自拆卸设备，同时确保各类配件的完整。
人员安全	人身安全	请谨慎操作，安装时避免划伤、砸伤或坠落。
	保护	切勿直视激光，同时避免激光照射皮肤。

说明

- 由于产品升级或其他原因，本文档内容会不定期进行更新。除非另有约定，本文档中的所有内容不构成任何明示或暗示的担保。
- 如需了解更多产品内容，请访问公司网站。

Copyright © 2026 伟景智能 All Rights Reserved.
V1.1 | 2026.10

Quick Guide

ViEye®

Intelligent Welding Dedicated Camera (90 PD)
SVersion-HJ-90

1 Product Introduction

ViEye intelligent welding dedicated camera is an active binocular stereo vision 3D camera designed for intelligent welding applications. It can quickly generate point cloud data models, depth maps, grayscale images and other result data information. It is also adaptable to various complex environments, supporting high-precision modeling even in scenarios such as strong light, reflections, and black objects with light absorption. As a visual input for welding systems, it can work with software to achieve functions such as workpiece scanning, weld seam extraction, weld seam planning, and weld seam tracking, integrating both dynamic and static functions.

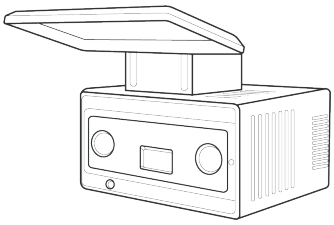

2 Bill of Materials

- Camera × 1
- Power Cable and Adapter × 1
- Gigabit Ethernet Cable × 1

3 Hardware Installation

1. Use the installation adapter to mount the camera onto the robotic arm, as shown in the diagram below. (Mounting holes are designed on multiple sides of the camera, allowing flexible installation from various angles .)

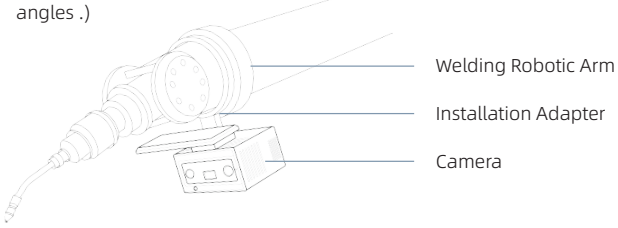

2. Install the power cable and network cable, ensuring the connectors align with the notches on the sockets, as shown in the image below. Do not use excessive force when plugging or unplugging cables to avoid damaging the pins.

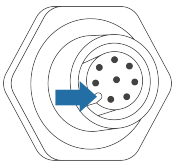

Power Cable Interface

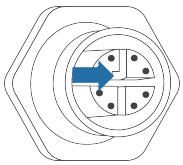

Ethernet Cable Interface

3. (Optional) Connect external signals to the camera's trigger cable to enable " level enable " control. For more information, please refer to *3D Industrial Camera User Manual.*
   - Orange Cable (Trigger Input)
   - Brown Cable (GND)

4 Replace the Protective Cover (Optional)

If you need to clean or replace the camera's protective cover, follow these steps:

1. Use a screwdriver to unscrew the right screw of the camera pressure plate. Slide the plate horizontally rightward until it disengages from the slot, then remove it.
2. Take out the old glass, clean it or replace it with a new one.
3. Slide the plate horizontally leftward to fit into the slot properly, then tighten the right fixing screw with the screwdriver.

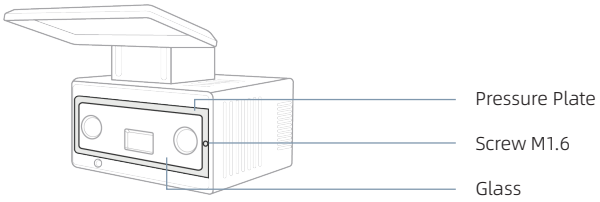

5 Dimensions and Mounting Hole Locations

- As products are continuously updated and improved, if the drawings in this guide differ from the actual product purchased, please contact our staff for the corresponding version of the installation drawings.

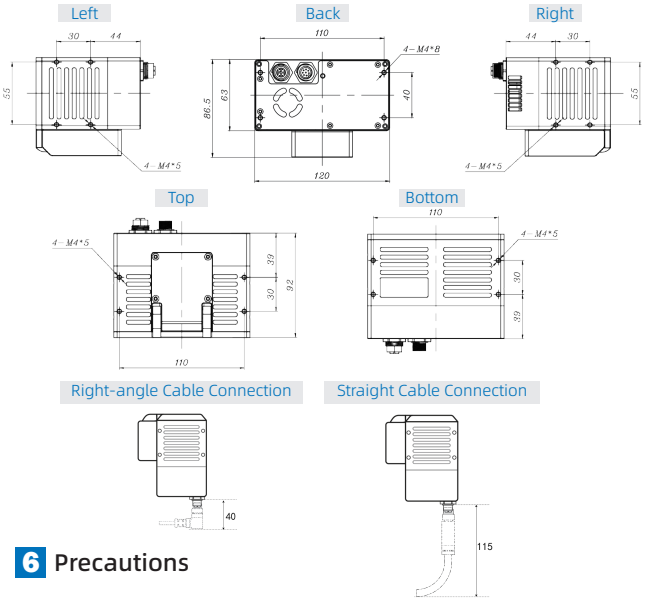

6 Precautions

Caution This device is a high-precision equipment. Please read and follow the requirements below:

Category	Item	Requirements
Camera Mounting Plate	Material	Aluminum Alloy 6061-T6.
	Thickness	10mm or greater. (Note: If the onsite environment is harsh with high vibration or long mounting plate cantilevers, reinforcement ribs must be added to the back of the plate.)
	Surface Flatness	≤0.1mm.
	Installation	The bottom surface of the camera must be fully flush with the mounting plate after installation, ensuring no warping or deformation.
Power	Power Input	• Camera power input: 24V ± 4V, current ≥ 2A , complies with grounding regulations . • 220V AC must meet national standards .
	Power On	When installing the power cable , first connect the device side , then connect the power supply side .
	Power Off	When installing or removing the device , the power supply must be disconnected first.
Equipment	Stability	Ensure that the device is securely installed and the cables are not loose . Make sure the device does not shake during operation to avoid affecting accuracy .
	Structure	Please handle the device with care to avoid strong impacts or vibrations .
	Electromagnetic	Never place the device near strong magnetic objects . Ensure proper electrostatic protection and keep the device away from electromagnetic radiation.
	Cleaning	Please continuously keep the device's glass window clean.
	Completeness	Never disassemble the device without authorization, and ensure that all accessories are complete.
Personal Safety	Safety	Handle with care during installation to avoid scratches, impacts, or dropping.
	Protection	Never look directly at the laser, and avoid laser exposure to the skin.

Note

- Due to product upgrades or other reasons, the content of this document may be updated periodically. Unless otherwise agreed, all content in this document does not constitute any express or implied warranty.
- For more information about the product, please visit the company's website.

Beijing Vizum Technology Co., Ltd.
Address: Room 703, 7th Floor, A2 Building, Zhongguancun No. 1, 81 Beiqing Road, Haidian District, Beijing
010-82098660 www.vizumtech.com

Copyright © 2026 Vizum All Rights Reserved.

V1.1 | 2026.10